Peak PKG160OYS Granite Oyster

Uncompromised design and lasting durability unite with Franke's Peak under mount granite sink. The Peak series adds must have functionality with the Franke integral ledge system. This alluring work horse can be completed with custom accessories to maximize your work space.

Product Picture

Technical Drawing

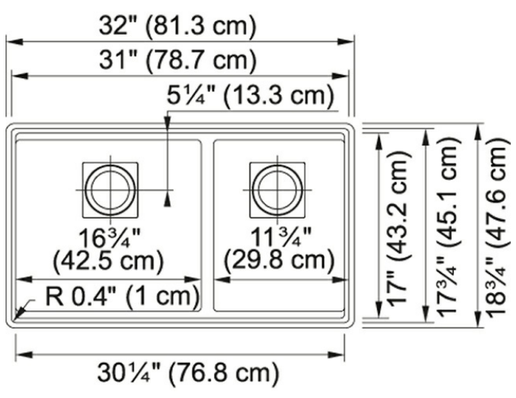

Product Dimensions

Length overall	32''
Width overall	18 3/4''
Length of large bowl	17 7/16''
Width of large bowl	17 3/4''
Depth of large bowl	9 1/2''
Length of small bowl	12 7/16''
Width of small bowl	17 3/4''
Depth of small bowl	9 1/2''
Minimum Cabinet Size	36''

General Information

Type of Material	Granite
Number of Bowls	2
Where to buy	Showroom

Article Numbers

FUN#	125.0389.615
US Part Number	PKG160OYS